ORDERING INFORMATION

VALVE SELECTION GUIDE

Valve Part # = V 3 F P

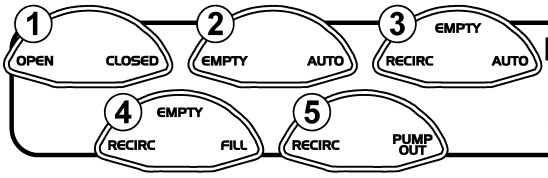

For use with system #
1, 2, 3, 4 or 5

Cable Approach
For Systems 2, 3 & 4 only
(System 1 valve is non-directional - leave blank. For system 5 valve specify "RET")

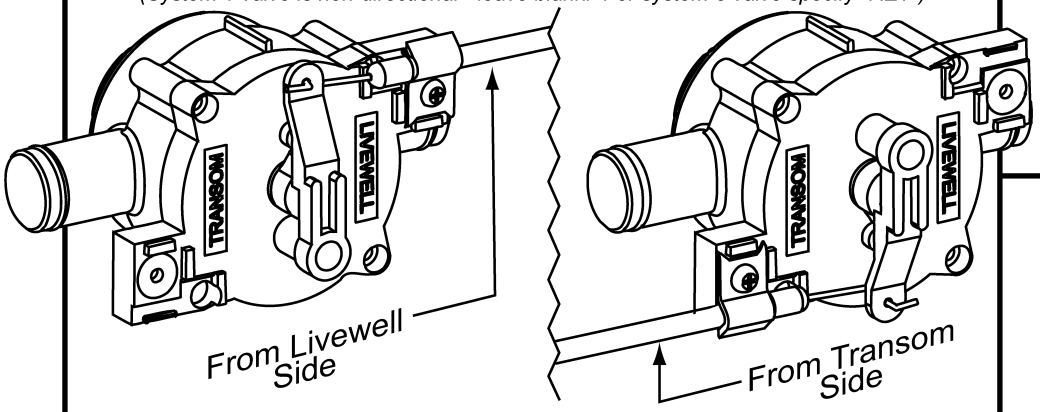

Front cable approach = *F*

Rear cable approach = *R*

Pressure Equalization Flapper (PEF)
For systems 2 & 3 only
(Not applicable to system valves 1, 4 or 5 - leave blank)

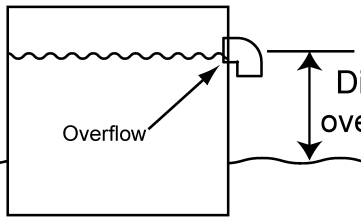

Distance from center line of overflow to outside water level

If distance is from 1" to 8" = *Leave Blank*
If distance is from 8" to 13" = *P*